HIL−BOX®enclosure system
with smooth walls, plain lid

shock−resistant enclosures optional with grey or transparent lid.

protection spec.: IP 65 acc. DIN EN 60529
colour: grey RAL 7035

zero halogen

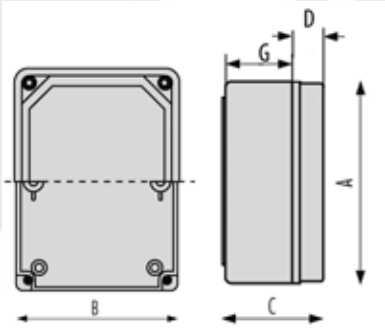

Item Number	**55600**
HIL−BOX® enclosure system	
A [mm]	100,00
B [mm]	100,00
C [mm]	50,00
G [mm]	45,00
D [mm]	15,00

Hilpress GmbH
Grützmühlenweg 40
D−22339 Hamburg